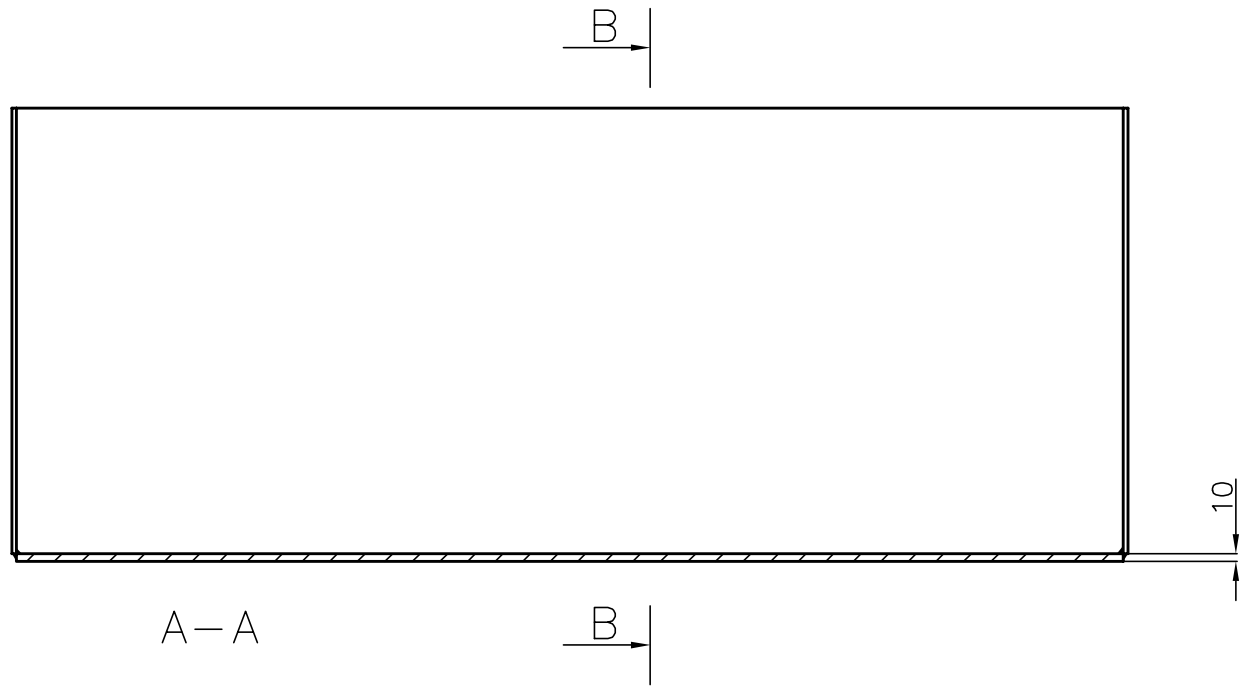

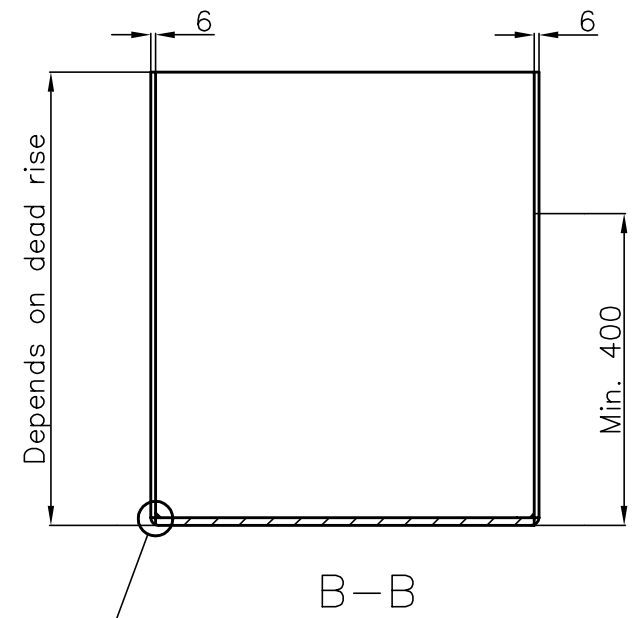

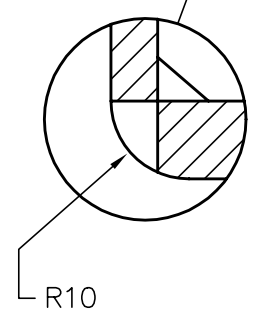

Scale: 1:1

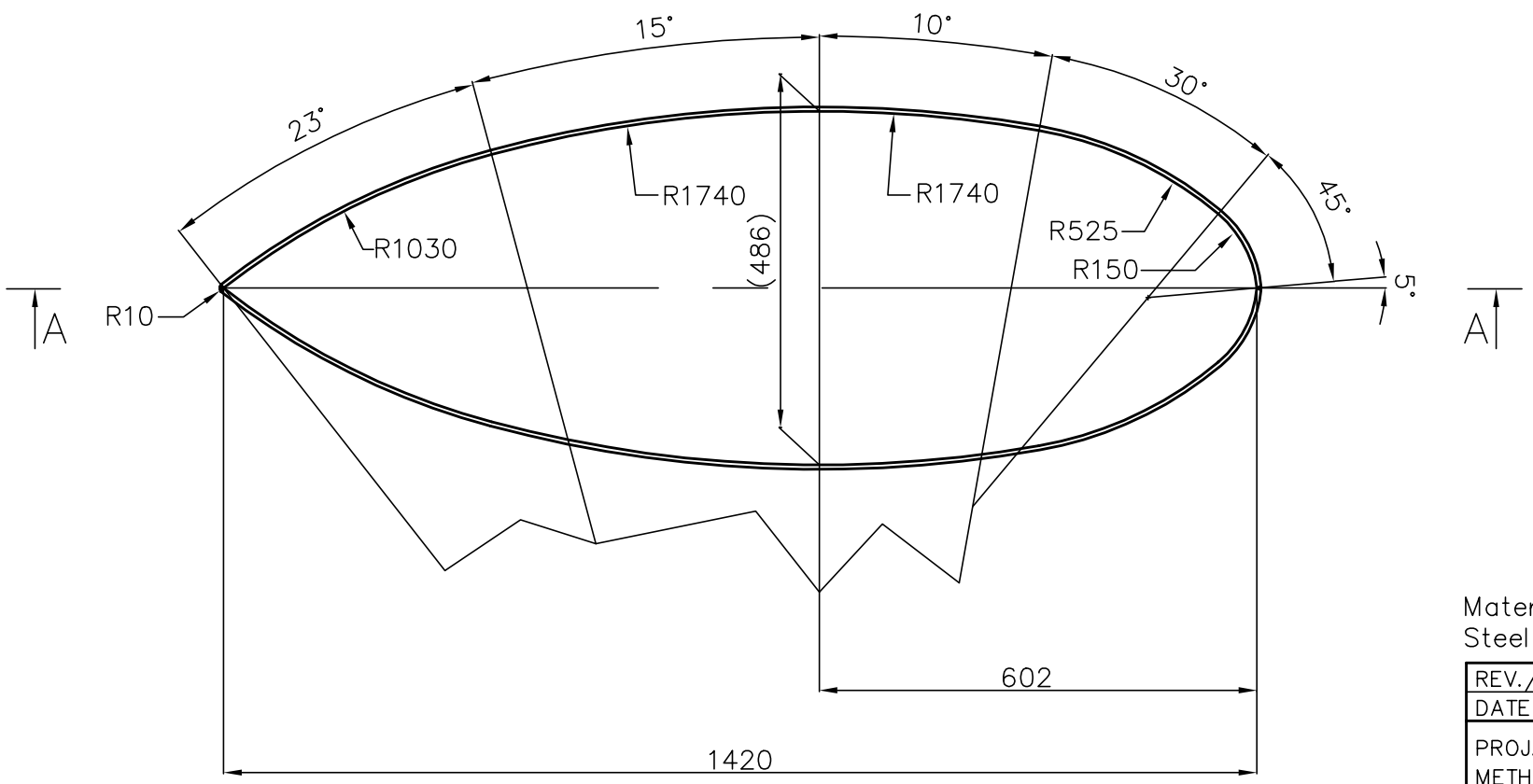

Planeness demands, bottom plane:
- No concavity is accepted
- Maximum convexiti 3 mm
- Small local hollows (max. 1 mm) will be accepted.

Materials:
Steel plate, Fe 510 D1, (St 52–3 N), 6 and 10 mm.

REV./SIGN.									
DATE									
PROJ. METHOD			UNLESS OTHERWISE STATED, TOLERANCE: DIM.: ISO 2768–mK THREAD: 6g/6H			PARTS LIST: 111–203431	SIMRAD A KONGSBERG Company		
SCALE	1:10	1:1	BLISTER			SHEET 1 OF 1	SH.SIZE: A3	REV.:	
DRAWN	00.02.04	TW				871–203432		A	
CHECKED	00.02.25	KTP	TRANSDUCER						
APPROVED	00.03.15	HB	ES38–10			FILE NO.: 692–50			